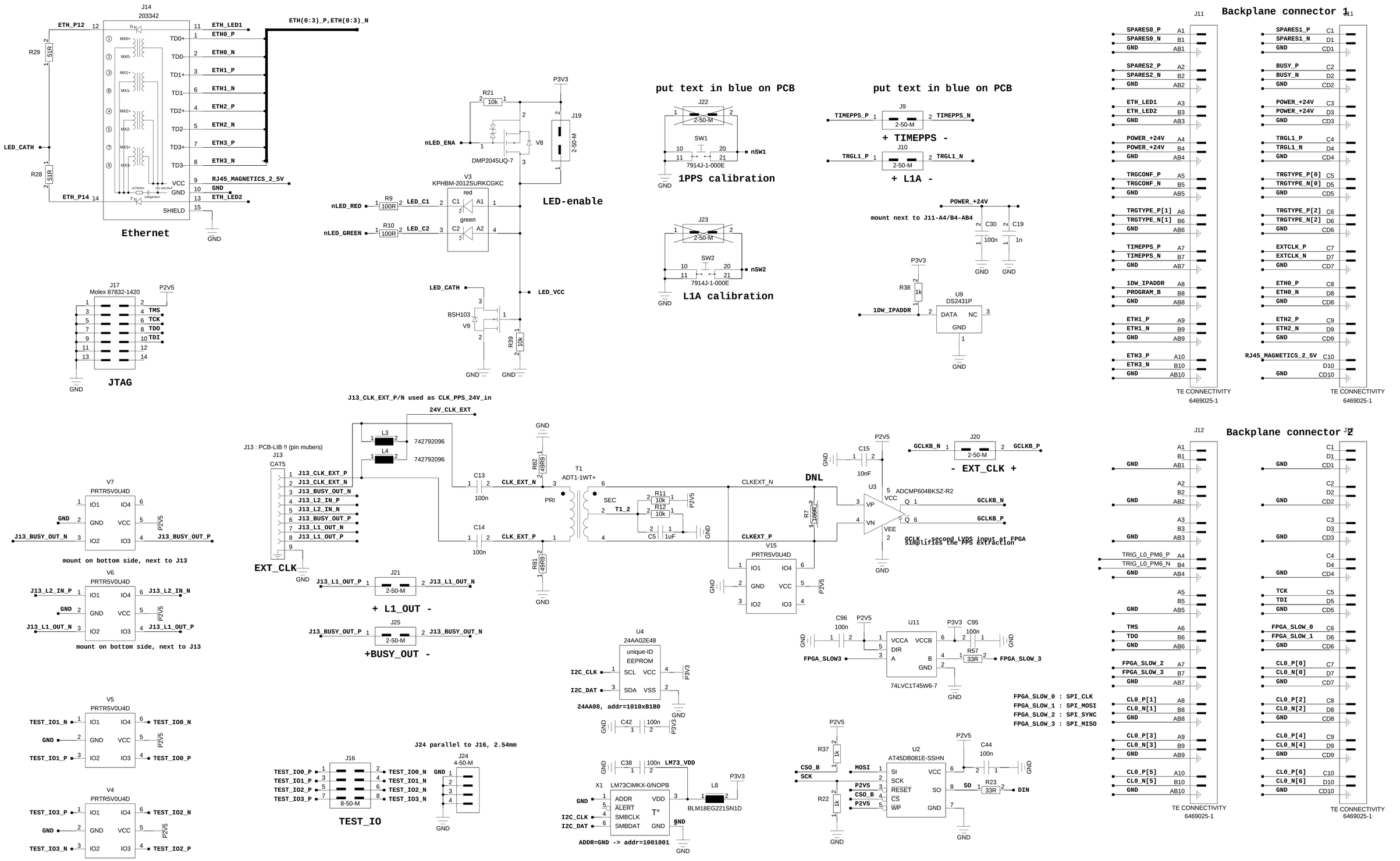

Developer: Karl-Heinz Sulanke	Project: CTA, Digital Trigger Backplane		
	Schematic: DTB5		
Drawn by: Karl-Heinz Sulanke	Sheet: Connectors		
Layouter: B. Kielgas, Anakonda GmbH	DESY- Platanenallee 6, D-15738 Zeuthen		
Changed of sch:			
Date Changed: 09/07/2024:06:40	PCB No: 9573-00	Rev: 1	Size: A3
Date of prod. data:	PCB name: DTB5	Sheet: 1 of 4	

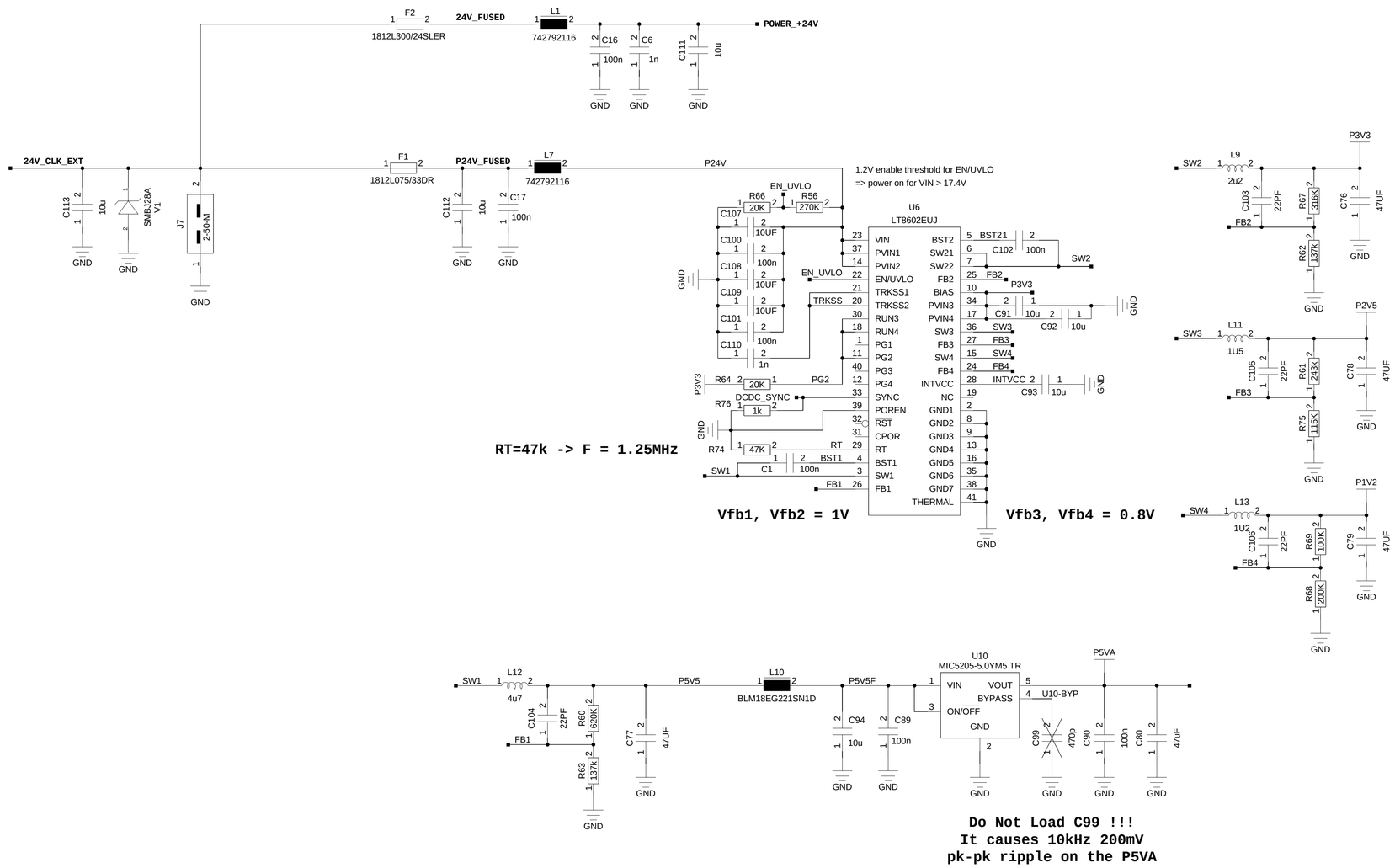

Do Not Load C99 !!!
It causes 10kHz 200mV
pk-pk ripple on the P5VA

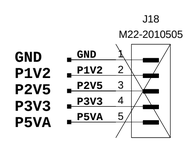

DNL

Developer: Karl-Heinz Sulanke	Project: CTA, Digital Trigger Backplane Schematic: DTB5		
Drawn by: Karl-Heinz Sulanke	Sheet: DC/DC Power supply		
Layouter: B. Kielgas, Anakonda GmbH	DESY- Platanenallee 6 D-15738 Zeuthen		
Changed of sch:			
Date Changed: 25/01/2024:11:27	PCB No: 9573-00	Rev: 1	Size: A3
Date of prod. data:	PCB name: DTB5	Sheet: 2 of 4	

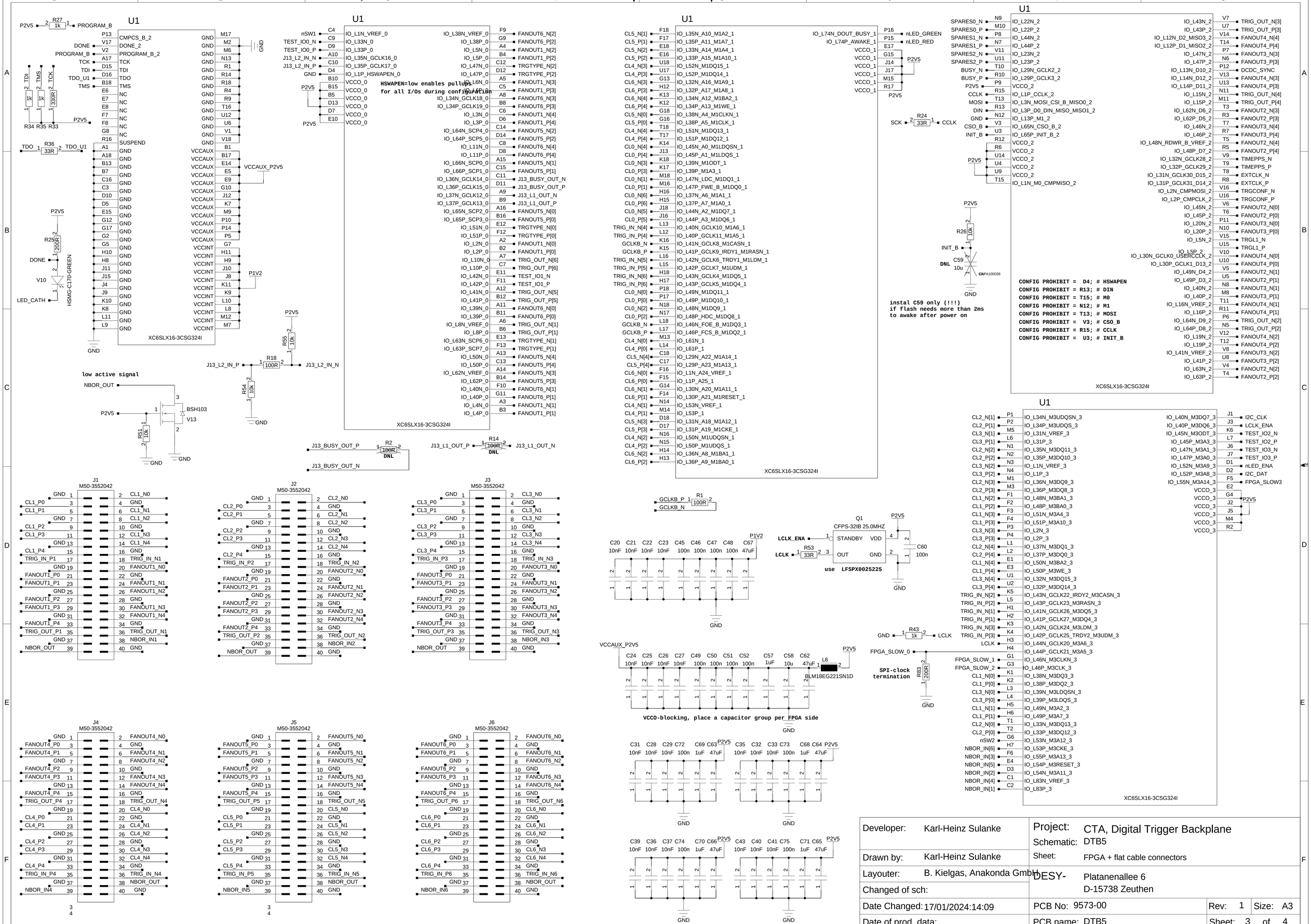

Developer:	Karl-Heinz Sulanke	Project:	CTA, Digital Trigger Backplane
		Schematic:	DTB5
Drawn by:	Karl-Heinz Sulanke	Sheet:	FPGA + flat cable connectors
Layouter:	B. Kielgas, Anakonda GmbH	DESY-	Platanenallee 6, D-15738 Zeuthen
Changed of sch:			
Date Changed:	17/01/2024:14:09	PCB No: 9573-00	Rev: 1 Size: A3
Date of prod. data:		PCB name: DTB5	Sheet: 3 of 4

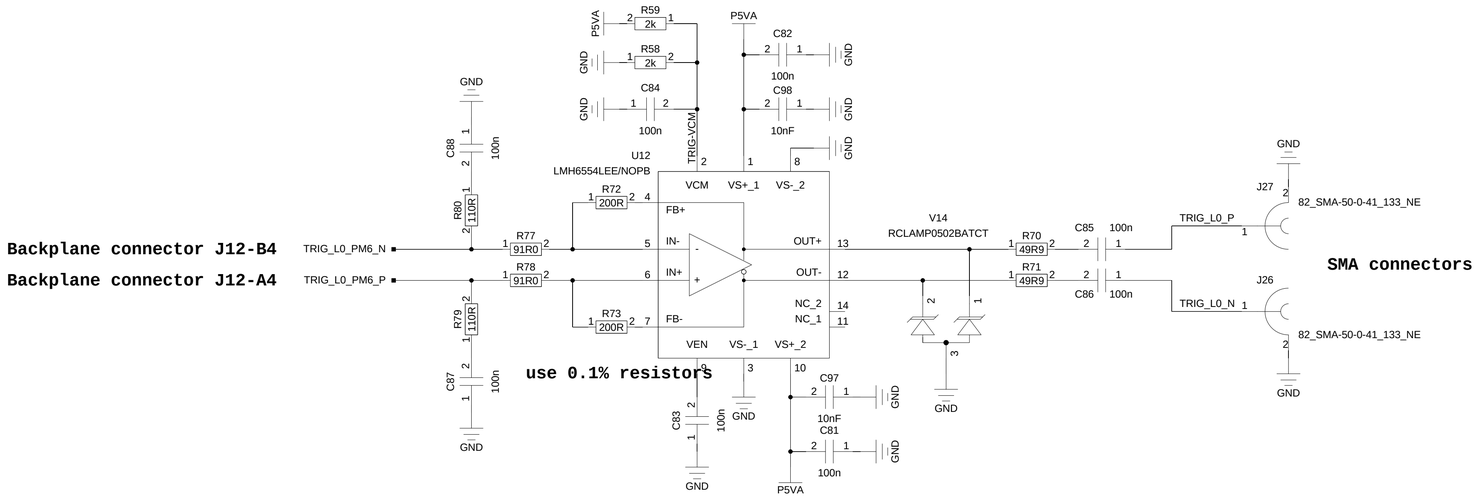

Developer:	Karl-Heinz Sulanke	Project:	CTA, Digital Trigger Backplane		
		Schematic:	DTB5		
Drawn by:	Karl-Heinz Sulanke	Sheet:	analog trigger cable driver		
Layouter:	B. Kielgas, Anakonda GmbH	DESY-	Platanenallee 6 D-15738 Zeuthen		
Changed of sch:					
Date Changed:	17/01/2024:14:12	PCB No:	9573-00	Rev: 1	Size: A3
Date of prod. data:		PCB name:	DTB5	Sheet: 4 of 4	